WS 200 U – Take-up housing (TU .. TF / UCST / ST..)

Set screw locking, wide slot. Temperature range -30°C to +110°C

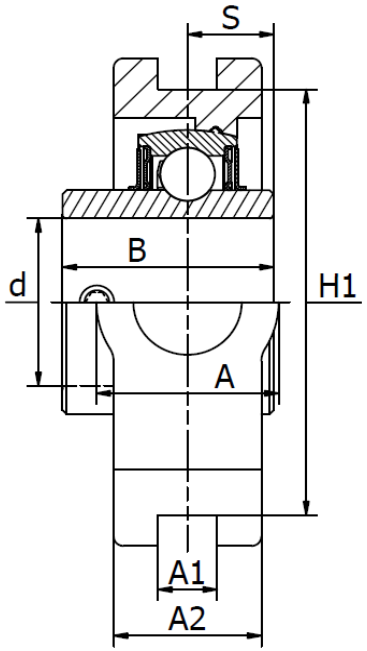

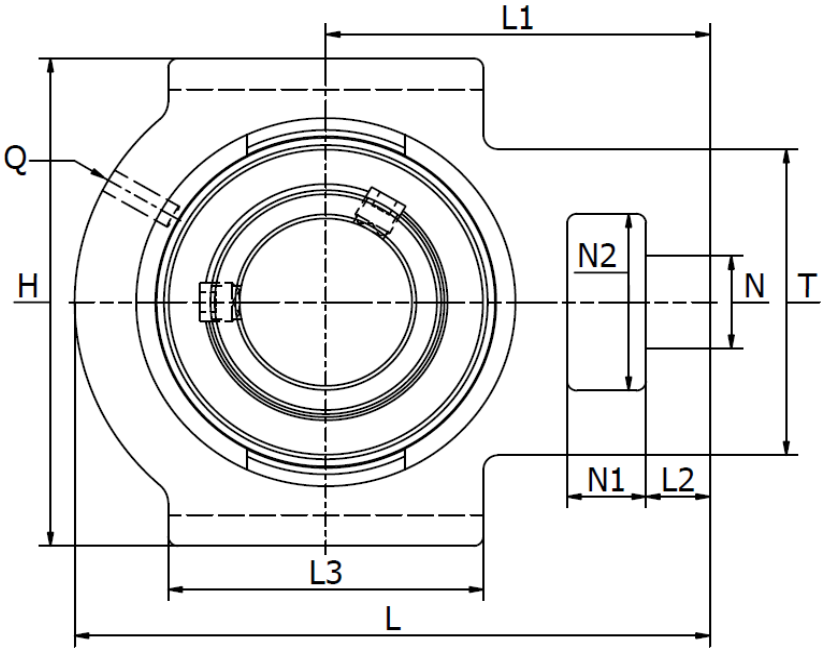

Product No.	d	Dimensions (mm)																Bearing no.	Housing no.	Weight (kg)
	mm	L	A_2	S	H	H_1	L_3	L_2	L_1	N	B	N_1	N_2	T	A	A_1	Q			
WS 206 U	30	114	28	15,9	104	89,0	57,0	10	70,0	22	38,1	16	37,0	56	37	13,5	M6X1	UC 206	WS 206 O.L	1,6
WS 207 U	35	129	30	17,5	103	89,0	64,0	12	78,0	22	42,9	17	38,0	64	37	13,5	M6X1	UC 207	WS 207 O.L	2,0
WS 208 U	40	145	33	19,0	115	101,0	83,0	15	88,0	29	49,2	19	50,0	83	49	17,5	M6X1	UC 208	WS 208 O.L	2,7
WS 209 U	45	144	35	19,0	117	101,0	83,0	15	87,0	29	49,2	19	49,0	83	49	17,5	M6X1	UC 209	WS 209 O.L	2,9
WS 210 U	50	149	36	19,0	117	101,0	86,0	16	90,0	29	51,6	19	49,0	83	49	17,5	M6X1	UC 210	WS 210 O.L	3,2