Stainless steel hollow pin chains

Type A

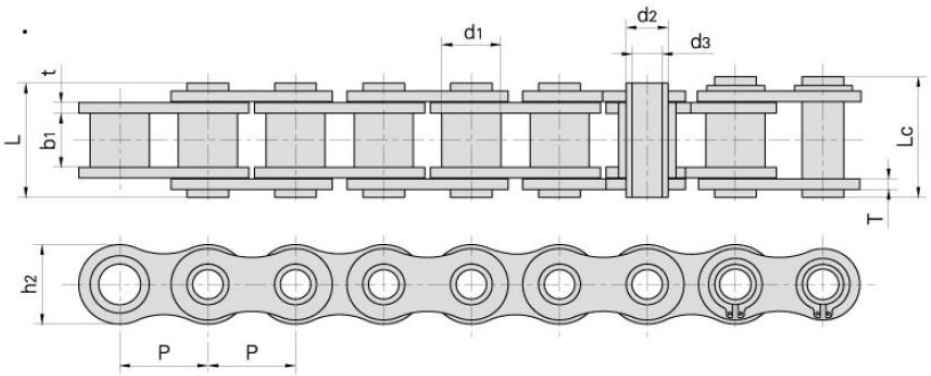

Type B

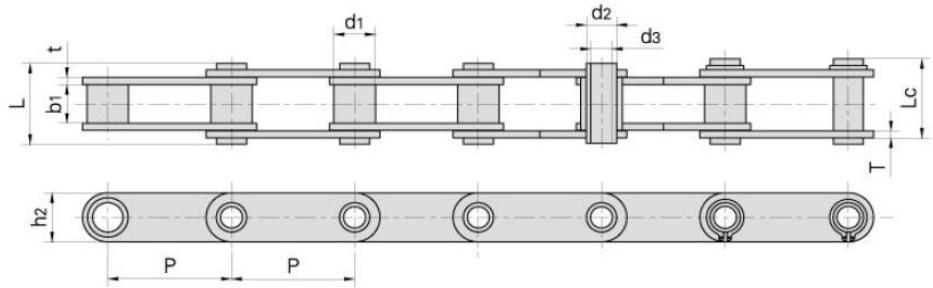

Chain No.	Pitch	Bush diameter	Width between inner plates	Pin Diameter		Pin Length		Inner plate depth	Plate thickness	Breaking load	Weight pr. meter	Type
	P	d1 max	b1 min	d2 max	d3 min	L max	Lc max	h2 max	t/T max	Q min	q	
	mm	mm	mm	mm	mm	mm	mm	mm	mm	kN/LB	kg/m	
08BHPFSS	12,700	8,51	7,75	6,55	4,50	16,4	17,6	11,80	1,6/1,3	7,8/1773	0,57	**A**
40HPSS	12,700	7,95	7,85	5,63	4,00	16,5	17,6	12,00	1,50	7,7/1750	0,55	**A**
50HPSS	15,875	10,16	9,40	7,03	5,13	20,7	21,9	15,09	2,03	14,0/3182	0,92	**A**
60HPSS	19,050	11,91	12,70	8,31	6,00	25,8	26,8	18,00	2,42	16,8/3818	1,31	**A**
***12BHPSS**	19,050	12,07	11,68	6,50	4,00	21,6	22,8	15,90	1,85	16,5/3750	1,10	**A**
80HPSS	25,400	15,88	15,75	11,40	8,05	32,5	33,8	24,00	3,25	35,0/7955	2,29	**A**
C2040HPSS	25,400	7,95	7,85	5,63	4,00	16,5	17,6	12,00	1,50	7,7/1750	0,47	**B**
S2050HPSS	31,750	10,16	9,40	7,22	5,12	20,5	21,8	15,00	2,03	14,3/3250	0,77	**B**
C2060HPSS	38,100	11,91	12,70	8,31	6,00	25,8	26,8	17,00	2,42	16,8/3818	1,03	**B**
C2080HPSS	50,800	15,88	15,75	11,40	8,05	32,5	33,8	24,00	3,25	35,0/7955	1,83	**B**
***HB50.8SS**	50,800	30,00	10,50	11,40	8,20	27,4	28,6	26,00	3,10	35,0/7955	2,60	**A**

*Roller chain:d1 in the table indicate the external diameter of the roller

Stainless steel hollow pin chains

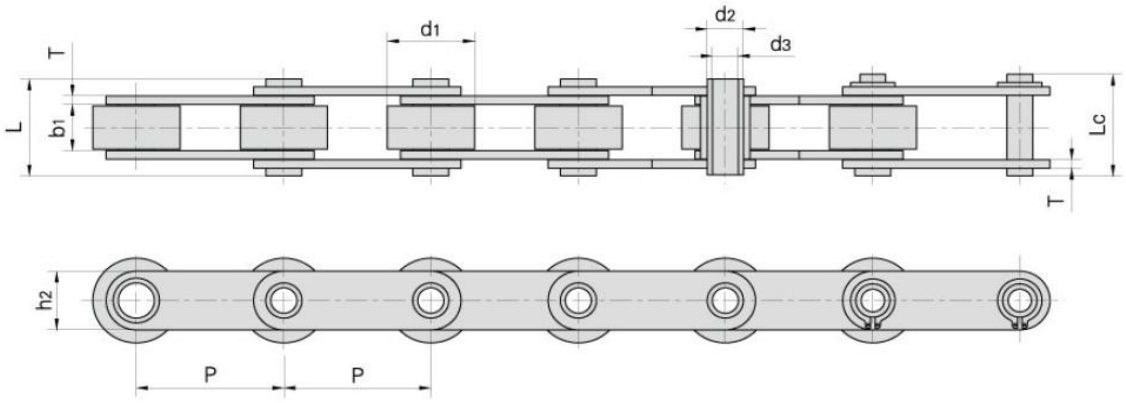

Chain No.	Pitch	Roller diameter	Width between inner plates	Pin Diameter		Pin Length		Inner plate depth	Plate thickness	Breaking load	Weight pr. meter
	P	d1 max	b1 min	d2 max	d3 min	L max	Lc max	h2 max	T max	Q min	q
	mm	mm	mm	mm	mm	mm	mm	mm	mm	kN/LB	kg/m
C2042HPSS	25,40	15,88	7,85	5,63	4,00	16,5	17,6	12,0	1,50	7,7/1750	0,79
C2052HPSS	31,75	19,05	9,53	7,22	5,12	20,5	21,8	15,0	2,03	14,3/3250	1,27
C2062HPSS	38,10	22,23	12,70	8,31	6,00	25,8	26,8	17,0	2,42	16,8/3818	1,74
C2082HPSS	50,80	28,58	15,75	11,40	8,05	32,4	33,8	24,0	3,25	35,0/7955	2,86
C2042H-HPSS	25,40	15,88	7,85	5,63	4,00	18,8	19,9	12,0	2,03	7,7/1750	0,96
C2052H-HPSS	31,75	19,05	9,53	7,22	5,12	22,1	23,4	15,0	2,42	14,3/3250	1,46
C2062H-HPSS	38,10	22,23	12,70	8,31	6,00	29,2	30,2	17,0	3,25	16,8/3818	2,02
C2082H-HPSS	50,80	28,58	15,75	11,40	8,05	36,2	37,6	24,0	4,00	35,0/7955	3,30