ZGS38 combine chain with attachments

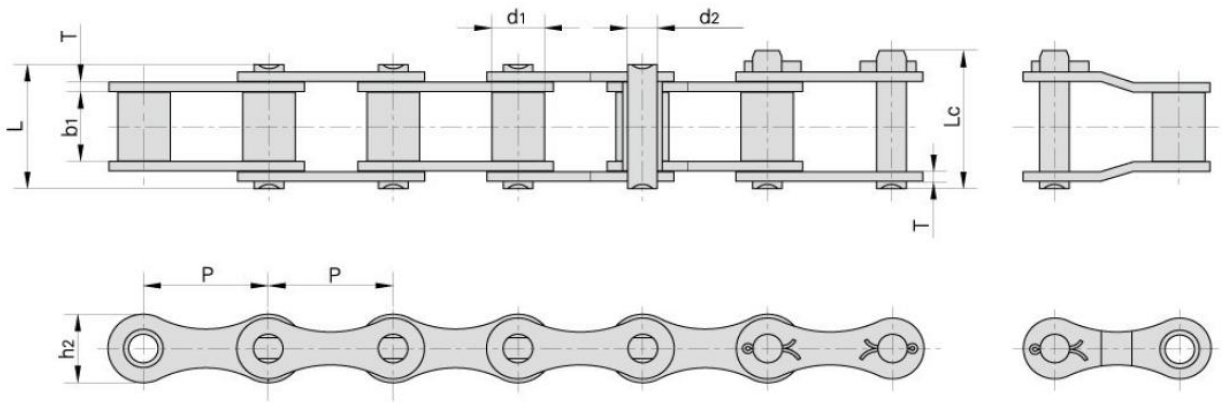

Chain No.	Pitch	Roller diameter	Width between inner plates	Pin diameter	Pin length		Inner plate depth	Plate thickness	Ultimate tensile strength	Average tensile strength	Weight per meter
	P	d1 max	b1 min	d2 max	L max	Lc max	h2 max	T max	Q min	Qo	q
	mm	mm	mm	mm	mm	mm	mm	mm	kN/LB	kN	kg/m
ZGS38	38.0	16.0	22.00	9.0	39.0	43.0	21.5	3.0	40.0/9091	55.3	2.00

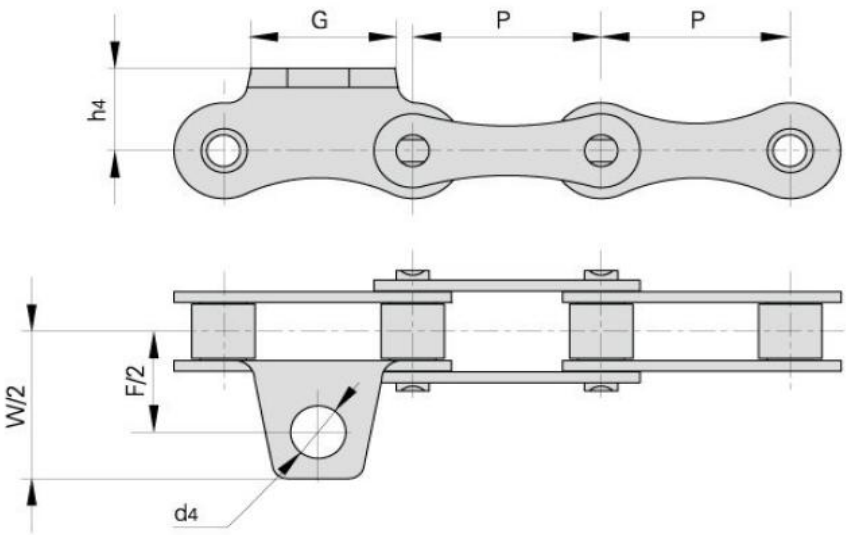

Chain No.	P	G	F	W	h4	d4
	mm	mm	mm	mm	mm	mm
ZGS38F2	38.0	17.2	59.0	78.1	19.6	11

ZGS38 combine chain with attachments

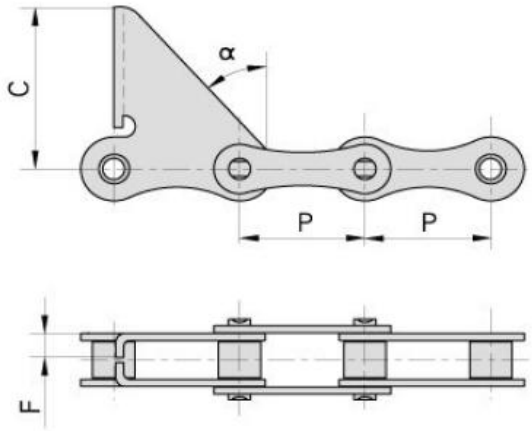

Chain No.	P	C	F	α
	mm	mm	mm	
ZGS38F1	38.0	60.0	14.0	32.5º

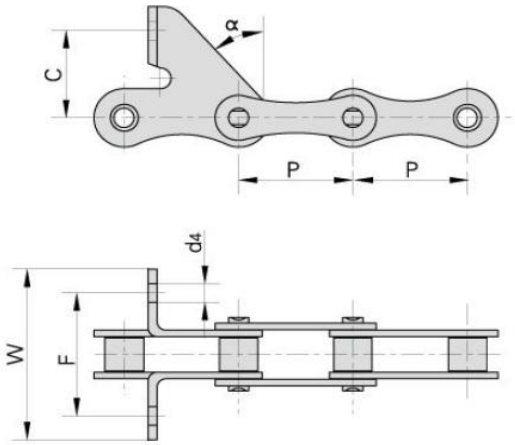

Chain No.	P	C	F	W	α	d4
	mm	mm	mm	mm		mm
ZGS38F3	38.0	30.0	52.0	68.4	43.5º	6.5

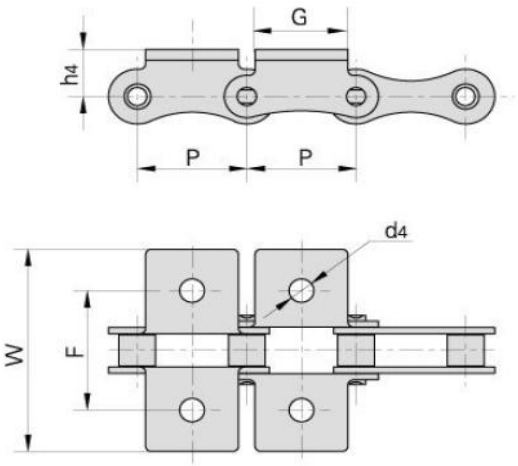

Chain No.	P	G	F	W	h4	d4
	mm	mm	mm	mm	mm	mm
ZGS38K1	38.0	32.0	53.0	83.2	20.0	8.5